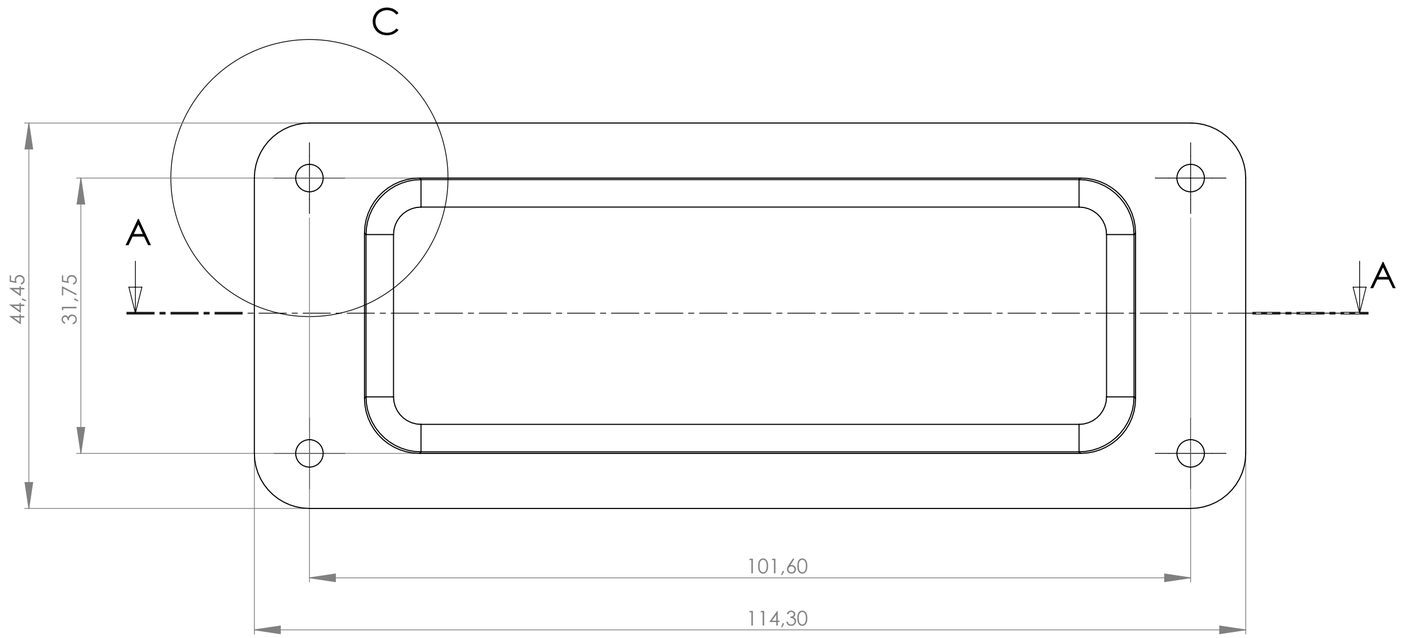

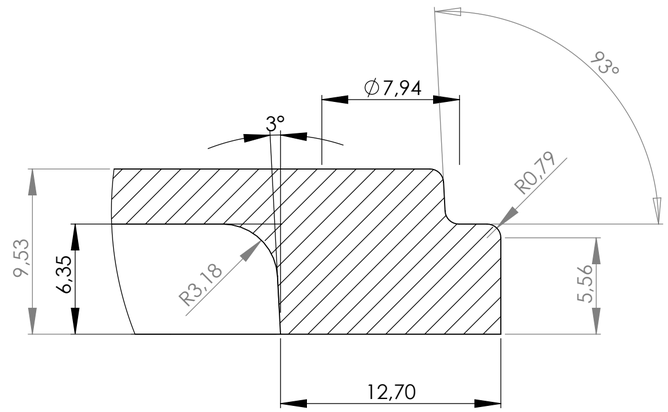

DETALHE B
ESCALA 4 : 1

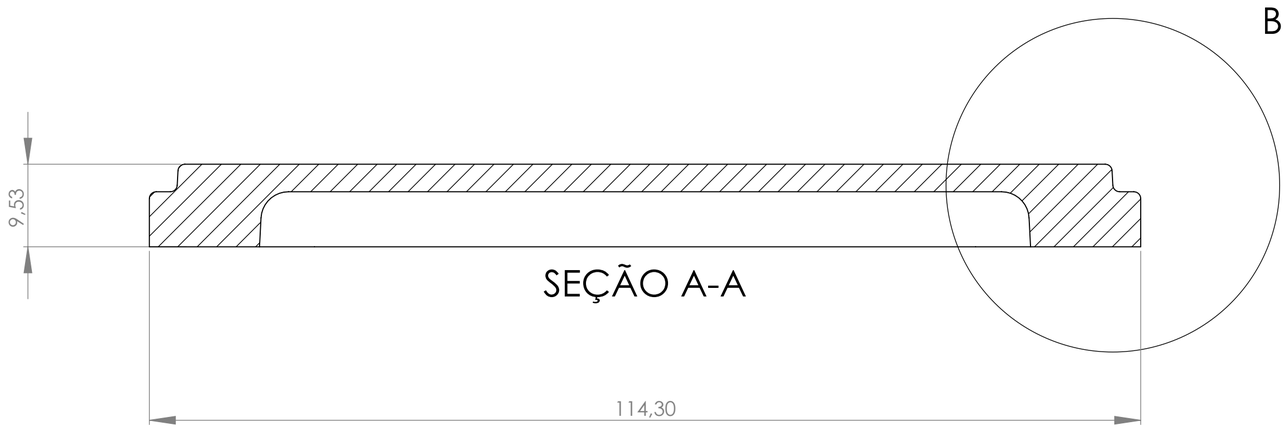

SEÇÃO A-A

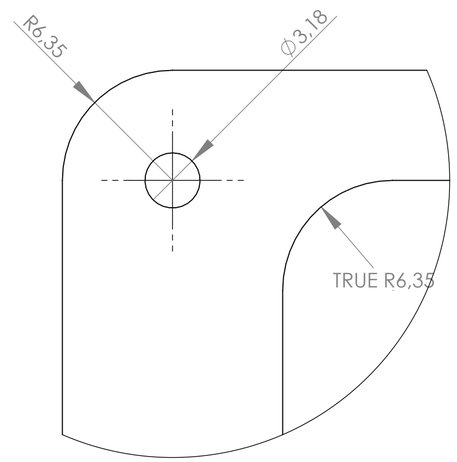

DETALHE C
ESCALA 4 : 1

UNLESS OTHERWISE SPECIFIED: DIMENSIONS ARE IN MILLIMETERS SURFACE FINISH: TOLERANCES: LINEAR: ANGULAR:	FINISH:			DEBUR AND BREAK SHARP EDGES	DO NOT SCALE DRAWING	REVISION
	NAME	SIGNATURE	DATE		TITLE:	
DRAWN						
CHK'D						
APPV'D						
MFG						
Q.A				MATERIAL:	DWG NO. Cover Plate	A2
				WEIGHT:	SCALE:2:1	SHEET 1 OF 1